TOTO

Specification Sheet

Close Coupled Toilet

CW421J/SW420JP

FEATURES

4.5/3 L Dual Flush Bowl Shape: Round Rough-In: 500 mm

OVERVIEW

4.5/3 L Dual Flush Bowl Shape: Round Rough-In: 500 mm

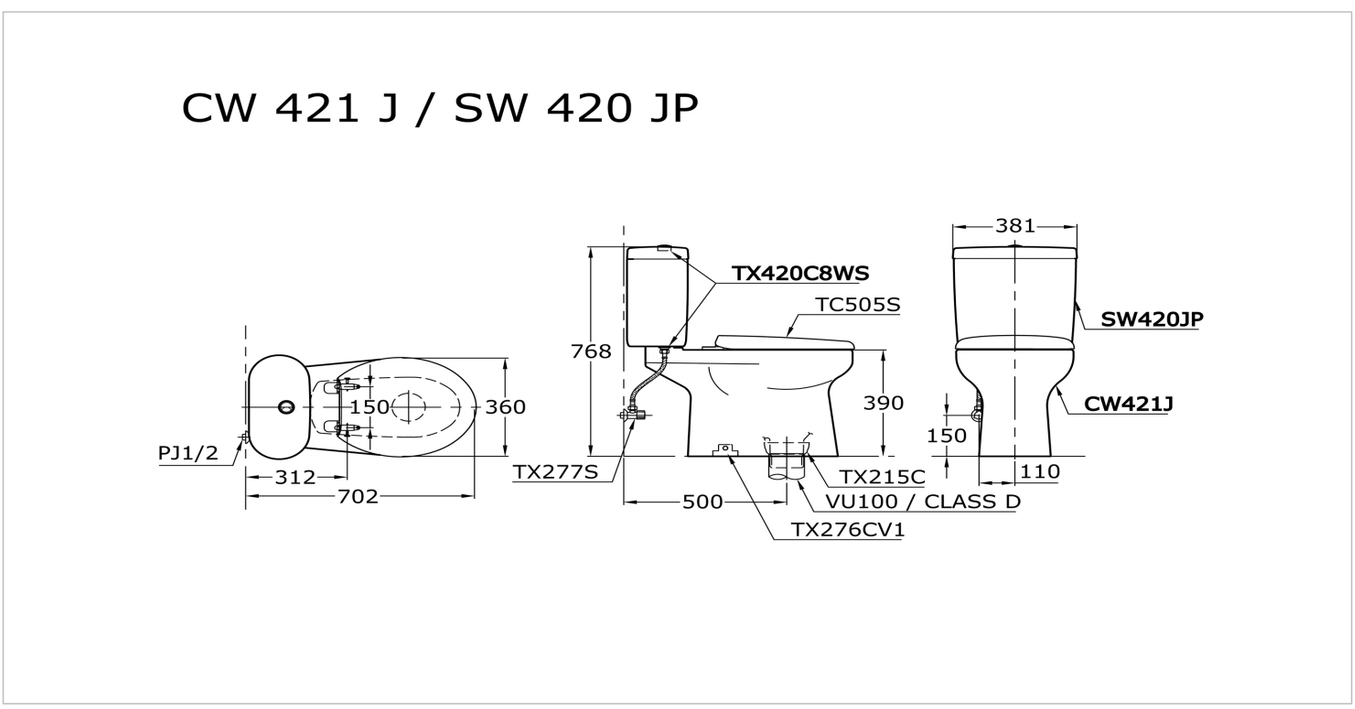

Copyright © 2014, TOTO indonesia, Inc. All rights reserved.

Some products may not be available in your area.
Prices indicated are manufacturer's suggested retail price, prices may change anytime without notice.
Please check with your nearest reseller for updated prices.

download from, mepbell.com